VR 3000 DF

Vertical Rollers Conveyors

Stable steel construction. Vertical roller conveyor for smooth transportation to the next work task as well as for transportation to storage and sorting of the finished windows. Easy handling of window elements. Every roller conveyor unit is 3.000 mm long. Plastic slide bars top and bottom. Three mini-roller conveyors with rubber rollers, diameter 50 mm. Basic unit with end rack. Vertical roller conveyor on rails with flanged rollers, mobile. Roller conveyor can be rotated 360°.

Voilàp S.p.A.
Via Archimede, 10
41019 - Limidi di Soliera (MO)
ITALY

Tel 059 895411
Fax: 059 859404
P.IVA e C.F. 02057270361
info@somecopvc.com
www.somecopvc.com

The right to make technical alterations is reserved.

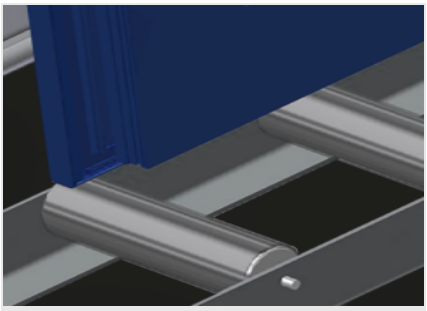

Support rollers

Rollers throughout, support roller width 200 mm

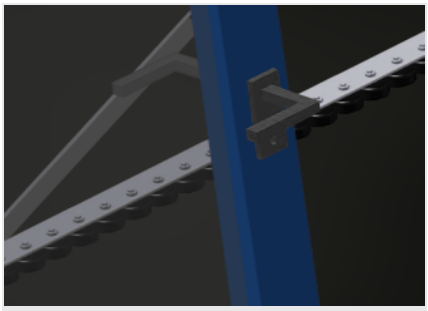

Mini-roller conveyor

Three mini-roller conveyors with rubber rollers, diameter 50 mm

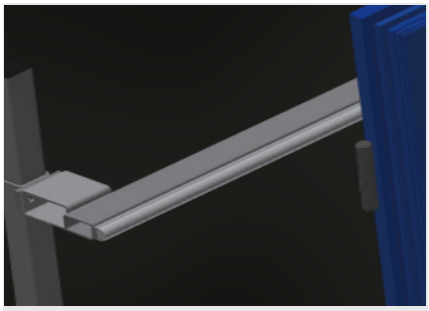

Back support

Rear back support with plastic slide bars, top and bottom

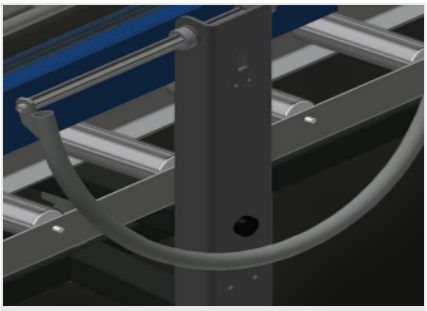

Grip

Grip makes pushing the roller conveyor on the rails easy

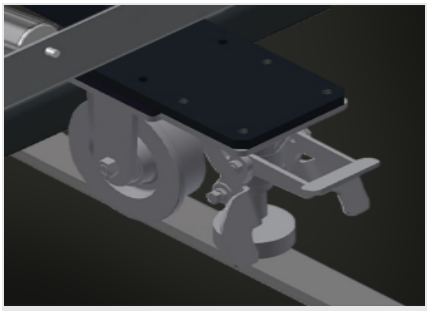

Mobility unit

Mobility unit with flanged rollers and fixing brake

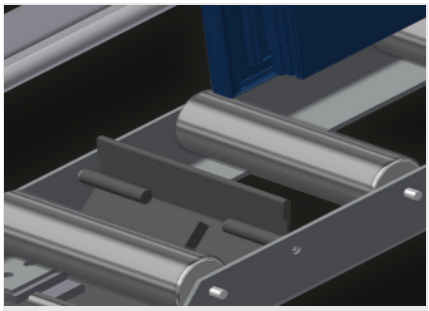

End stop (Optional)

End stop L = 200 mm

Voilàp S.p.A.
Via Archimede, 10
41019 - Limidi di Soliera (MO)
ITALY

Tel 059 895411
Fax: 059 859404
P.IVA e C.F. 02057270361
info@somecopvc.com
www.somecopvc.com

The right to make technical alterations is reserved.

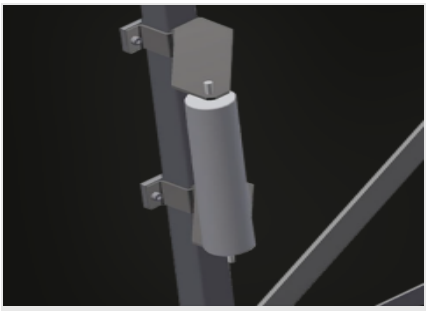

Lead-in rollers (Optional)

Protective rollers for beginning or end of roller conveyor: - L = 500 mm (pair) - L = 250 mm (pair)

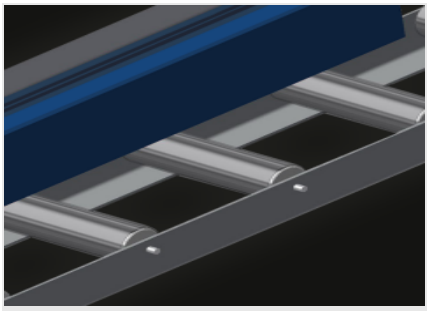

Profile protectors (Optional)

Profile protectors for support rollers 200 mm (Alum./11 x and Alum./16 x). Support rollers covered with protective tubing

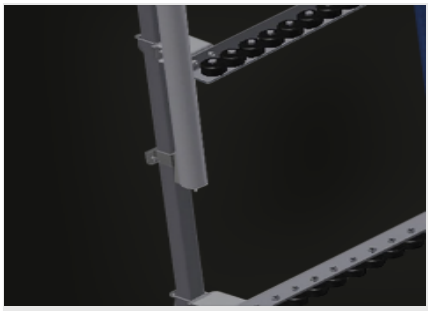

Additional mini-roller conveyors (Optional)

Additional mini-roller conveyors with rubber rollers top/bottom

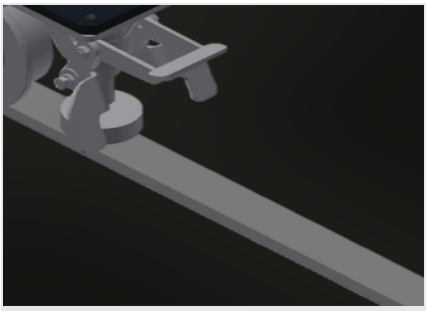

Rails (Optional)

Rails, 2.0 m, left and right

Voilàp S.p.A.
Via Archimede, 10
41019 - Limidi di Soliera (MO)
ITALY

Tel 059 895411
Fax: 059 859404
P.IVA e C.F. 02057270361
info@somecopvc.com
www.somecopvc.com

The right to make technical alterations is reserved.

VR 3000 DF / VERTICAL ROLLERS CONVEYORS

DIMENSION AND WEIGHT

Length (mm)	3.000
Width (mm)	1.000
Height (mm)	2.490
Support roller width (mm)	200
Support height (mm)	2.100
Weight (kg)	180

CHARACTERISTICS

Load capacity (kg)	200
Mini-roller conveyors with rubber rollers, diameter 50 mm	3
Basic unit with end rack	●
Vertical roller conveyor on rails with flanged rollers mobile	●
Roller conveyor can be rotated 360°	●
Lead-in rollers L= 500 mm (pair)	○
Lead-in rollers L= 250 mm (pair)	○
Additional mini-roller conveyors with rubber rollers top/bottom	○
Profile protectors for L= 200 mm	○
End stop L= 200 mm	○
Rail 2,0 m left and right	○

Included ● Available ○

Voilàp S.p.A.
Via Archimede, 10
41019 - Limidi di Soliera (MO)
ITALY

Tel 059 895411
Fax: 059 859404
P.IVA e C.F. 02057270361
info@somecopvc.com
www.somecopvc.com

The right to make technical alterations is reserved.